Cage

Cluster Suspension

Cage Small

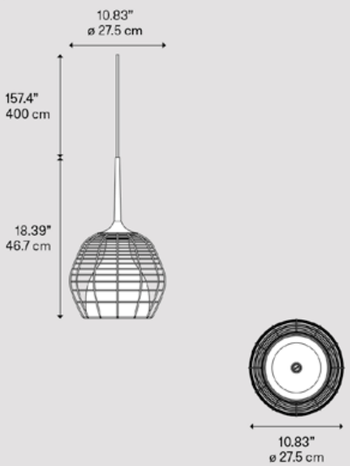

Light source Sorgente luminosa	Structure Montatura	Diffuser Diffusore
LED E27 1 max 15W	White	White
		Bronze
	Black	White
		Bronze
LED Medium Base 1 max 15W	White	White
		Bronze
	Black	White
		Bronze

BULBS not included
LAMPADINE non incluse

Net Weight/ Peso Netto: 2.35 kg | Pack/ Colli: 2

IP20 | Energy Saving | Dim

Suspension lamps must be installed on a canopy
Le lampade a sospensione devono essere installate su rosone

Materials Vacuum metallized blown glass diffuser
Metal cage
Diffusore in vetro soffiato metallizzato sottovuoto
Gabbia in metallo

Light Suspension lamp shedding diffuse and downward directed light. Commercial light bulb socket
Lampada a sospensione a luce diffusa e diretta verso il basso. Predisposizione lampadina commerciale.

Suspension

Cage Large

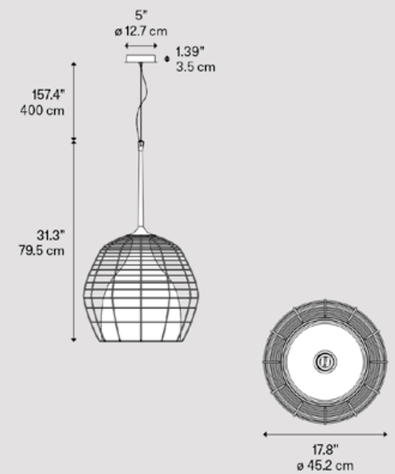

Light source Sorgente luminosa	Structure Montatura	Diffuser Diffusore
LED E27 1 max 25W	White	White
		Bronze
	Black	White
		Bronze
LED Medium Base 1 max 25W	White	White
		Bronze
	Black	White
		Bronze

BULBS not included
LAMPADINE non incluse

Net Weight/ Peso Netto: 5.4 kg | Pack/ Colli: 2

IP20 | Energy Saving | Dim

Cage Large, Bronze/Black
Cage Small, White/White

Colors white/ white | bronze/ white
white/ black | bronze/ black